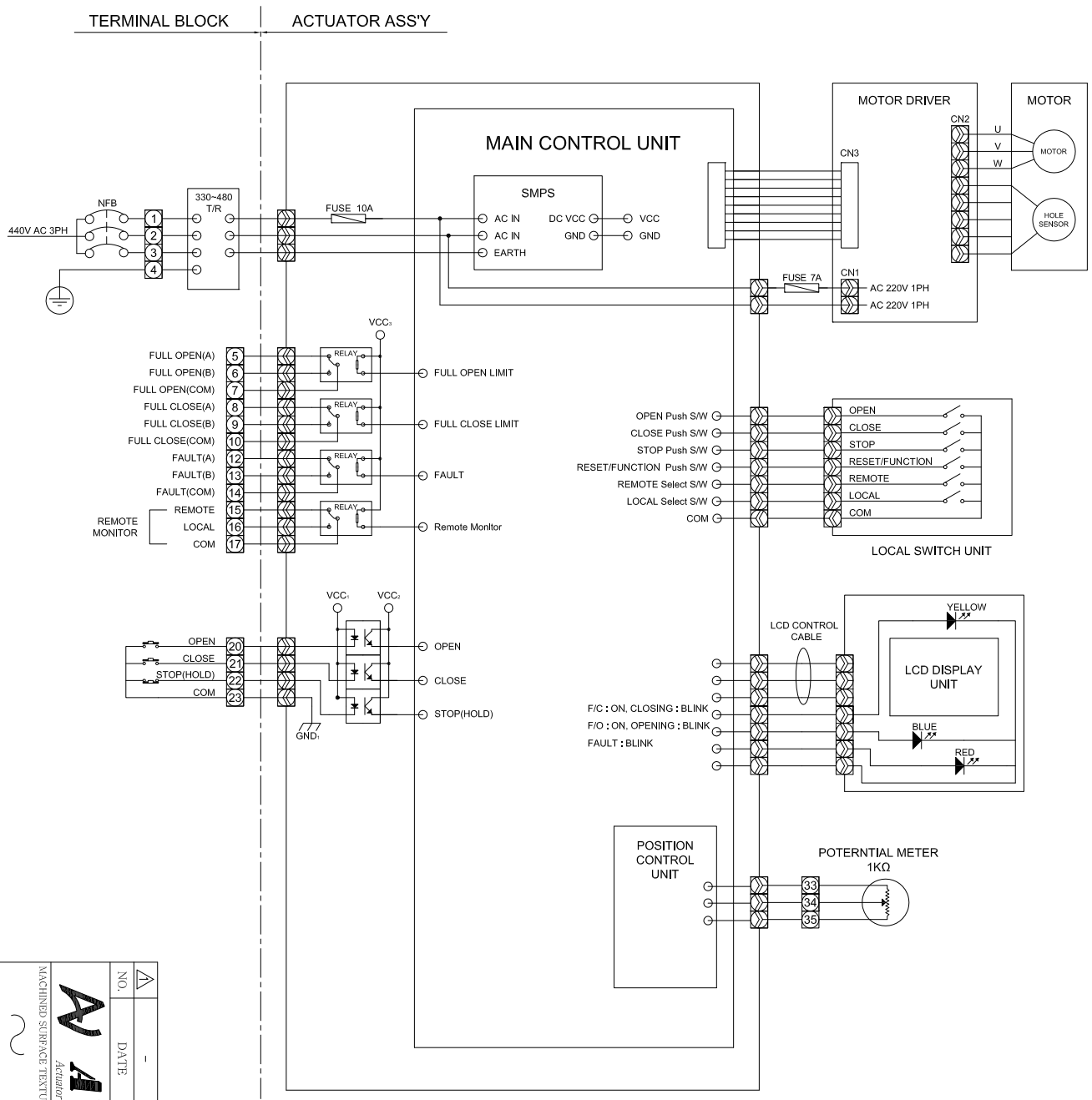

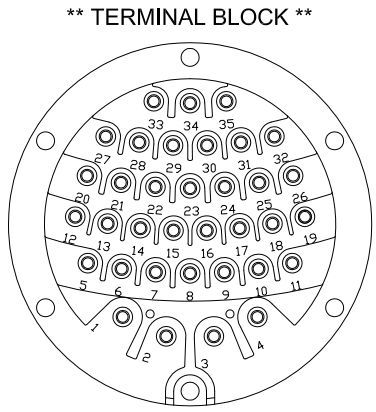

NO.	DATE	DESCRIPTION	REV	CHK	APR
A	-	-	-	-	-

AVTEC
Actuator & Vavle Technology

MACHINED SURFACE TEXTURE

DRAWING 제도	M&V
DESIGNED 설계	Y.I.HWANG
CHECKED 검토	S.H.KIM
APPROVED 승인	J.H.KIM

SCALE 척도	N/S
SHEET 비수	-
DATE 년월일	16.05.01

DWG. NAME 품명: SCHEMATIC WIRING DIAGRAM AVT-STP

MODEL NO.: -

QTY(수량): -

MAT'L (재질): -

WEIGHT (중량): - kg

HEAT TREAT(열처리)

DWG. NO. 도면: DQS-WD-101

REV. NO. 0

UNIT(단위) mm

NO.	SPECIFICATION	MATERIAL	UNIT	QTY	WEIGHT(KG) UNIT	TOTAL	REMARKS

AVTEC

A3(420 x297mm)